LIFTING CAPACITY
☐ 1300 Kg [B] (with counterweights)

BOOM HEIGHT
☐ 2980 mm

ENGINE POWER
☐ 25 HP

HYDRAULIC SYSTEM
☐ 42 l/min

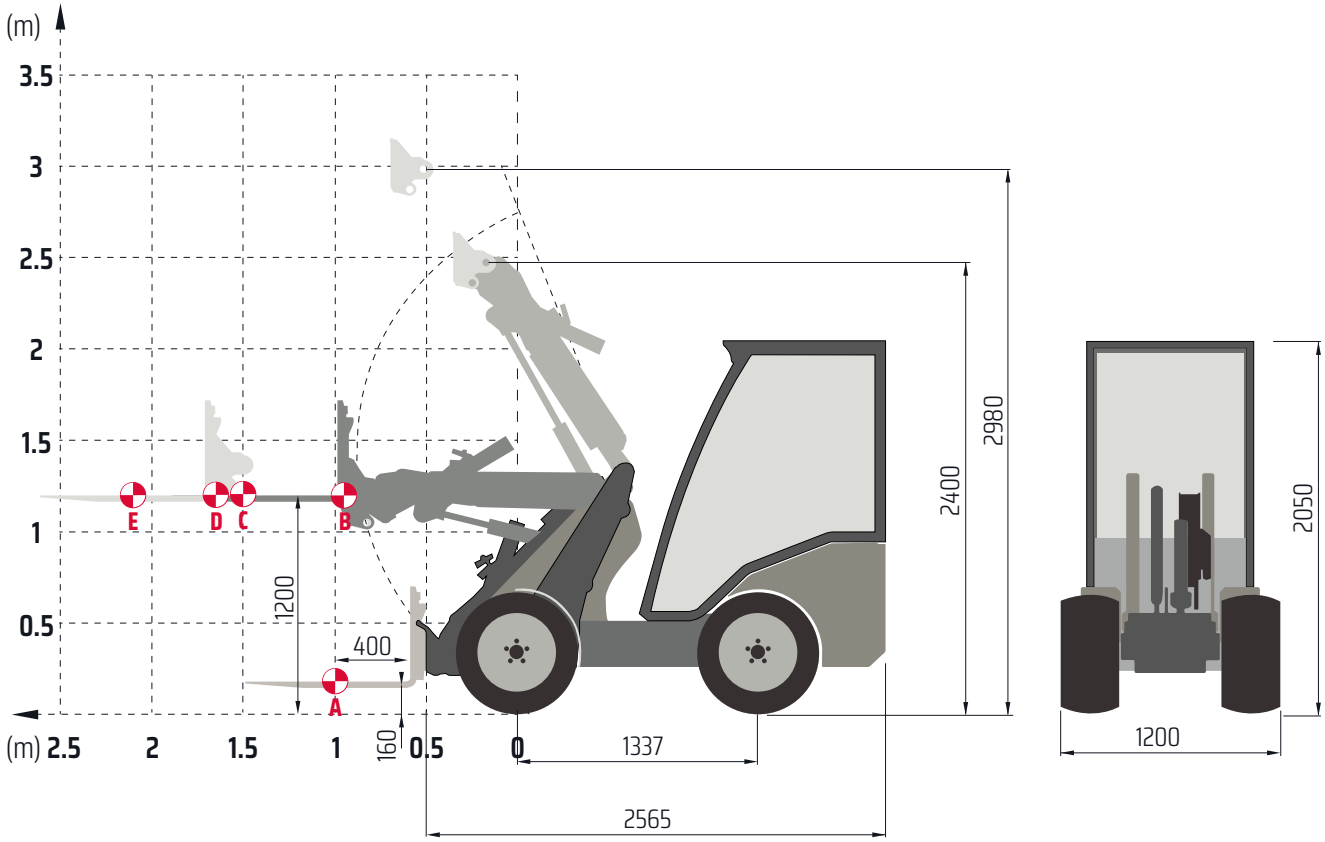

TIPPING LOAD

A Transport position
B Boom horizontal (without pallet fork)
C Boom horizontal
D Boom horizontal + extension
E Boom horizontal + extension

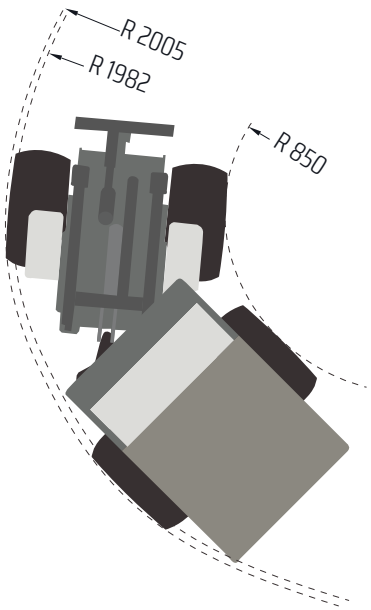

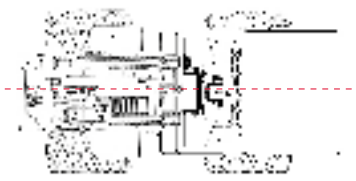

	BALLAST (200 kg)	NO BALLAST
A	950 Kg	800 Kg
B	1300 Kg	1100 Kg
C	860 Kg	550 Kg
D	800 Kg	600 Kg
E	500 Kg	300 Kg

STANDARD SET-UP

Engine	Kubota D 1105
Power Hp / Kw	25 / 18,6
Hydrostatic transmission - 4WD	Standard
Electric differential lock	Standard
Water cooling	Standard
Selflevelling	Standard
Hydraulic system l/min	42
Joystick	11 - function
12 V power outlet + front auxiliary electric outlet (165 W)	Standard
Working LED lights (2 front + 1 rear)	Standard
Adjustable ergonomic seat with belts	Standard
"UNIVERSAL" coupling plate	Standard
Metal hoods	Standard
ROPS+FOPS protection	Standard
Telescopic boom	Standard
Silent block	Standard
Tractor wheels	23x10.50-12
Weight Kg	1315

CODE WITH STANDARD SET-UP	PRICE
P 8 2 5 0 0 0 1 M 1	25.145,00

MORE DATA

Tipping load in transport position (Kg)	950 [A]
Max pulling force (Kg)	800 @ 23x8.50-12
Breakout force with boom down (Kg)	980
Average sound power level (dB/LwA)	99
Guaranteed sound power level (dB/LwA)	101
Speed (km/h)	12
Engine oil tank capacity (L)	5,1
Hydraulic oil tank capacity (L)	29

WHEELS

SKID
23x8.50-12
26x12.00-12
5.70-12

ALL TRAC
8PR
300/60X12

TRACTOR
23x8.50-12
23x10.50-12
26x12.00-12
7.00-12

TURF
23x8.50-12
23x10.50-12
24x13.00-12
26x12.00-12
26.5x14.00-12

										OPTIONS	PRICE
4	5	1	2	0	2	1	6	M	1	Electric floating system	263,00
4	5	1	2	0	2	1	7			Driving lights	930,00
4	5	1	2	0	2	3	9			Difference for high power Working LED lights (2 front + 1 rear)	261,00
4	5	1	2	0	2	4	1			Rear-view mirrors	131,00
4	5	1	2	0	0	0	4			Rear counterweights(100kg)	595,00
4	5	1	2	0	0	0	3			Rear counterweights (210kg)	1.183,00
4	5	1	2	0	0	4	6			Trailer coupling S/Type + rear counterweights (100kg)	638,00
4	5	1	2	0	0	4	7			Trailer coupling L/Type + rear counterweights (210kg)	1.445,00
4	5	1	2	0	2	3	7			Trailer coupling S/Type	209,00
4	5	1	2	0	0	0	1			Trailer coupling L/Type	263,00
4	5	1	2	0	1	8	5			Difference from standard to turf wheels 23x10.50-12	143,00
4	5	1	2	0	2	5	8			Difference from standard to turf wheels 26x12.00-12	405,00
4	5	1	2	0	3	9	9			Difference from standard to turf wheels 24x13.00-12	866,00
4	5	1	2	0	2	5	9			Difference from standard to skid wheels 26x12.00-12	583,00
4	5	1	2	0	2	3	0			Difference from standard to skid wheels 23x8.50-12	466,00
4	5	1	2	0	2	6	8			Difference from standard to tractor wheels 7.00-12	466,00
4	5	1	2	0	0	2	9			Difference from standard to skid wheels 5.70-12	275,00
4	5	1	2	0	2	3	5			Difference from standard to tractor wheels 26x12.00-12	398,00
4	5	1	2	0	2	7	5			Difference from standard to trac master wheels 300/60X12	447,00
4	5	1	2	0	2	2	5			Winter protection (front wind+screenwiper)	627,00
4	5	1	2	0	3	5	3			Reverse alarm	169,00
4	5	1	2	0	2	1	8			Cabin with heating system	4.031,00
4	5	1	2	0	3	2	8			Heating system	836,00
4	5	1	2	0	0	4	3			3 sides glass cabin	2.086,00
4	5	1	2	0	2	3	2			Pre-heating of engine's water	269,00
4	5	1	2	0	1	7	6			Comfort seat	179,00
4	5	1	2	0	1	4	2			Comfort heated seat	342,00
4	5	1	2	0	3	0	0			Ergonomic seat with headrest and armrest	337,00
4	5	1	2	0	3	3	4			Right armrest of the seat	62,00
4	5	1	2	0	2	2	1	M	1	High power wheel motor 400 cc.	407,00
4	5	1	2	0	2	3	3	M	1	Difference from 5- function joystick to 7- function joystick	718,00
4	5	1	2	0	0	1	2			Dual hydraulic function for boom lift + telescopic (includes 11- function)	Standard
4	5	1	2	0	3	4	0			Side safety protection	434,00
4	5	1	2	0	1	6	2			Wheel spacers for snow chains (for 4 wheels)	326,00
4	5	1	2	0	1	9	9			Pair snowchains + wheel spacers 23X10.50-12	576,00
4	5	1	2	0	2	1	0			Quick coupling system "MULTIFASTER" ® Part fixed on the machine	504,00
4	5	1	2	0	2	1	1			Quick coupling system "MULTIFASTER" ® Part for the attachments	256,00