LIFTING CAPACITY

☐ 1180 Kg [B] (with counterweights)

BOOM HEIGHT

☐ 2945 mm

ENGINE POWER

☐ 25 HP

HYDRAULIC SYSTEM

☐ 47 l/min

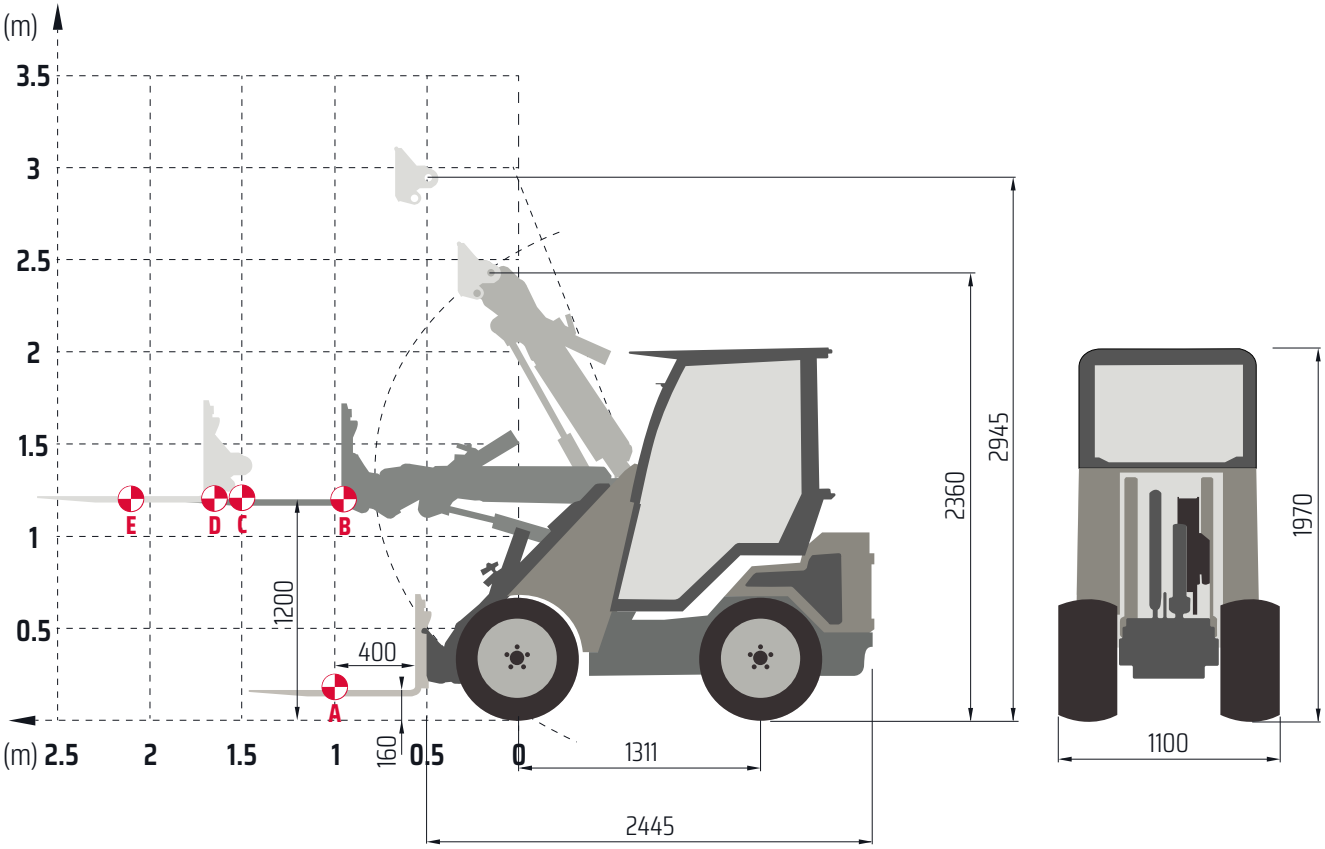

TIPPING LOAD

A Transport position
B Boom horizontal (without pallet fork)
C Boom horizontal
D Boom horizontal + extension
E Boom horizontal + extension

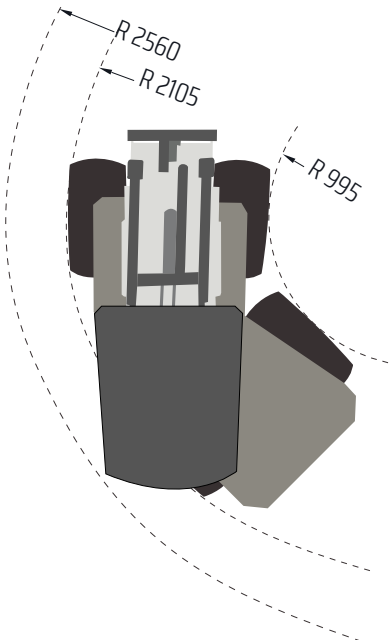

	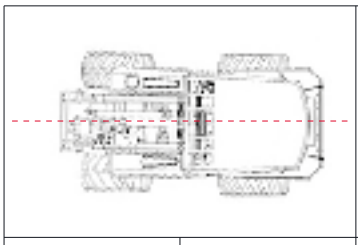		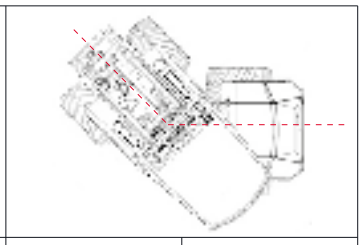	
	BALLAST (200 kg)	**NO BALLAST**	**BALLAST (200 kg)**	**NO BALLAST**
A	1000 Kg	806 Kg	700 Kg	588 Kg
B	1180 Kg	990 Kg	860 Kg	720 Kg
C	840 Kg	705 Kg	610 Kg	512 Kg
D	760 Kg	640 Kg	550 Kg	460 Kg
E	620 Kg	520 Kg	450 Kg	380 Kg

FOREST LINE

The cab with three-speed heating system is available as an option. It is built with a sturdy high-strength steel frame and tempered glass. The practical lateral glass compass-opening favors a regular exchange of air inside. The soundproofed cabin guarantees excellent comfort.

The models of the FOREST line are equipped with a sturdy high-strength steel grid for the protection of the radiator, fixed on the rear part of the frame.
The grid protects against impacts caused by contact with animals, logs and branches.
The lamellar system of the structure was designed to facilitate the ventilation necessary for cooling the radiator.

FOREST LINE

The FOREST line is recognizable by the particular graphic design with a "camouflage" motif.
These models have been conceived to work in the forestry sector thanks also to the radiator protection grid and the powerful Poclain wheel motors.

30T FOREST POCLAIN SINGLE SPEED

Radiator protection grid
Speed 12 Km/h @ 26x12.00-12 (Poclain)
Integral finishes with sablé paint
New "camouflage" graphic design

CODE FOR 30T FOREST SINGLE

P	3	0	1	2	0	0	0	1	M	1
4	5	1	2	0	0	0	7	M	1	
4	5	1	2	0	1	9	7			

30T FOREST POCLAIN DUAL SPEED

Radiator protection grid
Speed 9-20 Km/h @ 26x12.00-12 (Poclain)
Integral finishes with sablé paint
New "camouflage" graphic design

CODE FOR 30T FOREST DUAL

P	3	0	1	2	0	0	0	1	M	1
4	5	1	2	0	0	0	8	M	1	
4	5	1	2	0	0	9	7			

For further options see page 27.

Poclain "high performance" hydraulic wheel motors are by far the best and most reliable on the market and are standard on the FOREST models.